지시의 용접치수	지시의 모서리부분
g= 0	지시의일반 모서리제거 C = 0.3~1.2 R = 0.3~1.2

지시의 일반 허용공차	구분	0.5 ~ 6	6 ~ 30	30 ~ 120	120 ~ 315	315 ~ 1000	1000 ~ 2000
선형	급	±0.1	±0.2	±0.3	±0.5	±0.8	±1.2

표면거칠기							
Ra	25	12.5	6.3	3.2	1.6	0.8	0.2 / 0.1
Rmax	100S	50S	25S	12.5S	6.3S	3.2S	0.8S / 0.4S
다듬질		▽		▽▽	▽▽▽		▽▽▽▽

NO.	DATE	REVISION & DESCRIPTION	SIGNATURE REVIEWED	SIGNATURE CHECKED
3				
2				
1				

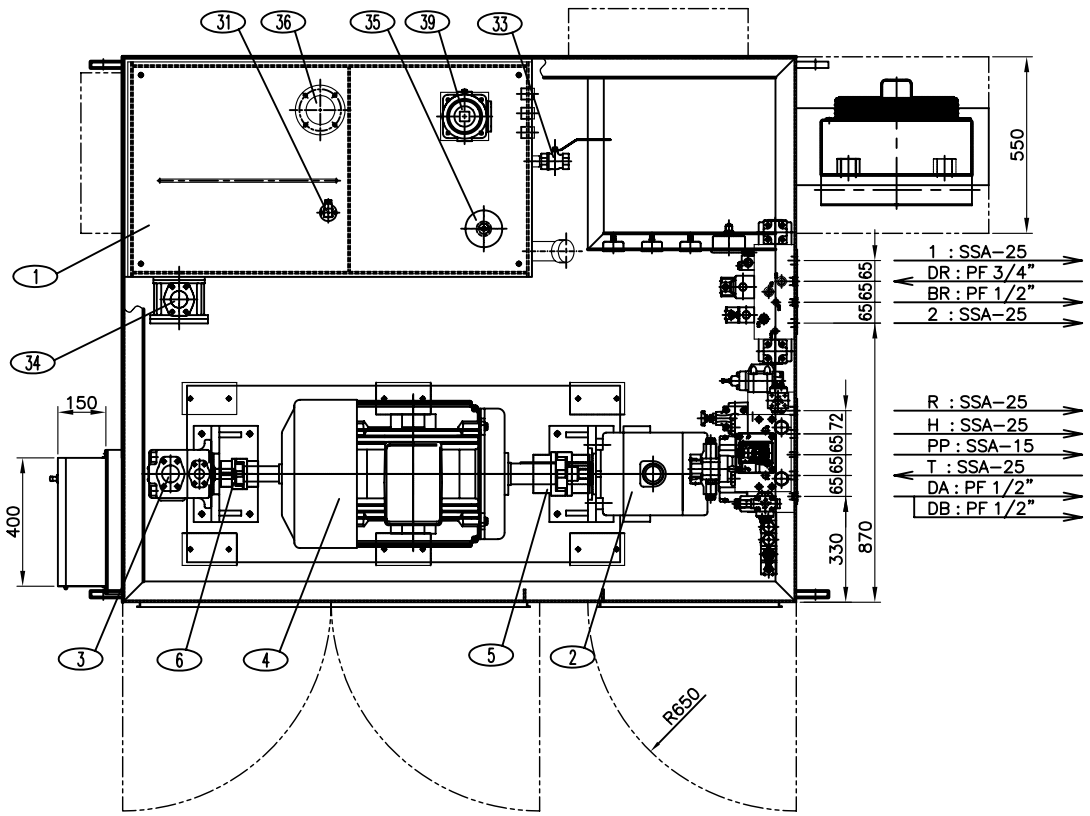

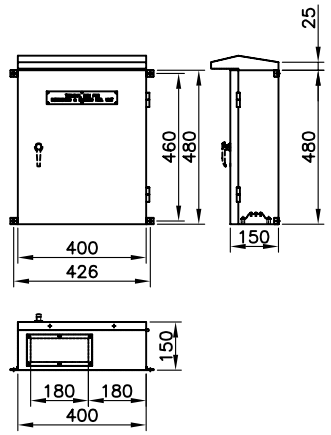

VIEW "Y"
TERMINAL BOX

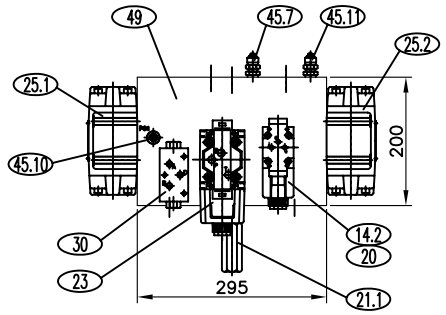

DETAIL FOR SLEWING

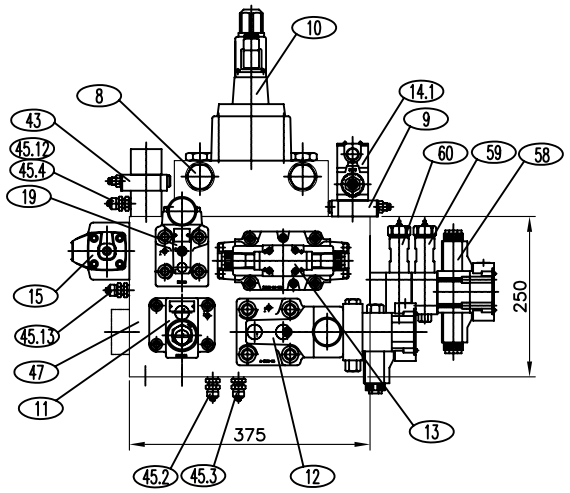

VIEW "X"
DETAIL FOR DERRICKING

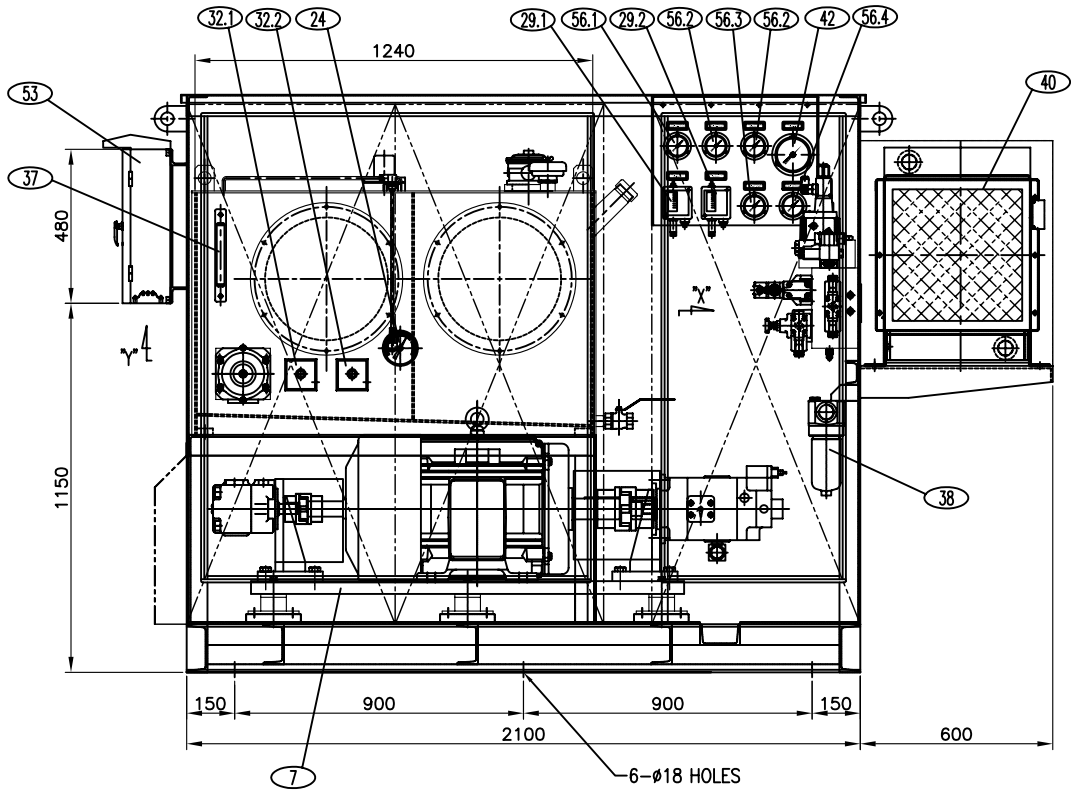

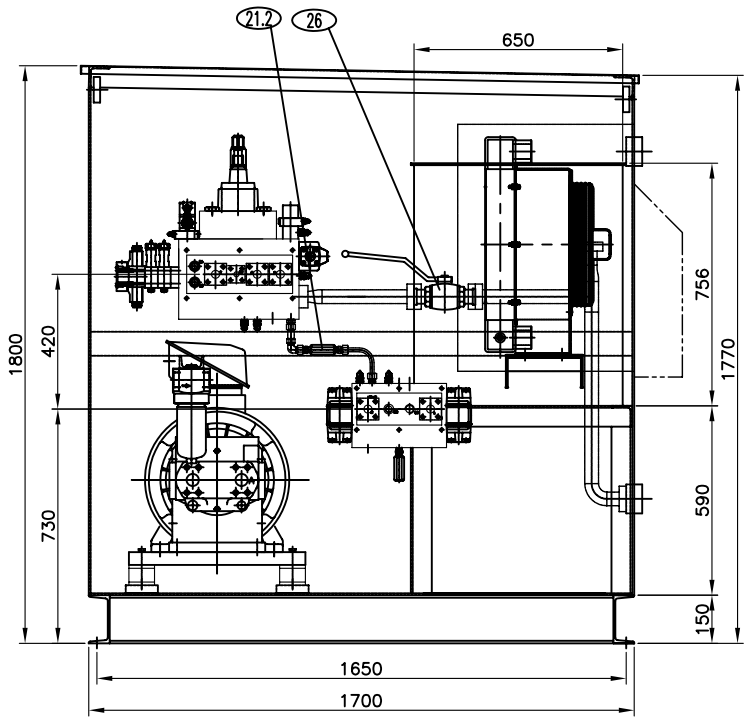

NOTE

1. WORKING PRESSURE : 190 kg/cm ²
2. FLOW : 99, 74 L/min
3. ELECTRICITY
   - –MAIN : 440VAC, 60Hz, 3Ph
   - –SPACE HEATER : 220VAC, 60Hz, 1Ph
   - –SOL POWER : 110VAC, 60Hz, 1Ph
   - –FAN COOLER : 440AC, 60Hz, 3Ph
   - –HEATER : 440AC, 60Hz, 3Ph
4. OIL QUANTITY : 450Lit
5. HYD. OIL : MINERAL OIL ISO VG32
6. PAINT
   1) TANK INSIDE : ACID TREATMENT
   2) UNIT : SURFACE PREPARATION – SSPC–SP10 SA2.5

1st – EPOXY PRIMER	: 50 M
2nd – EPOXY H.B	: 100 M
3rd – ACRYLIC URETHANE(COLOR : 5G 5/10)	: 40 M
TOTAL D.F.T	: 190 M

7. BUTTERFLY NUTS & DOOR HINGES SHALL BE SUS304 MATERIAL
8. WEIGHT : ab. 1,900 kg

NO.	DESCRIPTION	MAT'(KS)	UNIT QUANTITY	TOTAL QUANTITY	PER UNIT WEIGHT(kg)	TOTAL WEIGHT(kg)	REMARK'S
1	OIL TANK 450LIT		1				HYSYS

NO.	DATE	REVISIONS & DESCRIPTION	ENG'R	APPR'D
3				
2				
1				

HYSYS
GIMHAE KOREA

TITLE	PLANT / FACILITY	TITLE: HY'D UNIT DIAGRAM FOR DERRICKING & SLEWING					
	DRAWN	CHECKED	REVIEWED	APPROVED	DRAWN	CHECKED	REVIEWED	APPROVED
SIGNATURE								
DATE								

SCALE	NONE
PROJECTION	
SIZE	A1
DIMENSION	mm
REF. DWG. NO.	
EQUIPMENT	
MAKER DWG. NO.	HS-RDH-0402
POSCO DWG. NO.	