지시의 용접치수	지시의 모서리부분
a	지시의일반 모서리제거 C = 0.3~1.2 R = 0.3~1.2
a= 0	

지시의 일반 허용공차	구분	0.5 ~ 6	6 ~ 30	30 ~ 120	120 ~ 315	315 ~ 1000	1000 ~ 2000
선형	급	±0.1	±0.2	±0.3	±0.5	±0.8	±1.2

표면거칠기								
Ra	√	25	12.5	6.3	3.2	1.6	0.8	0.2	0.1
Rmax		100S	50S	25S	12.5S	6.3S	3.2S	0.8S	0.4S
다듬질	~	▽		▽▽		▽▽▽		▽▽▽▽	

NO.	DATE	REVISION & DESCRIPTION	SIGNATURE REVIEWED	SIGNATURE CHECKED
3				
2				

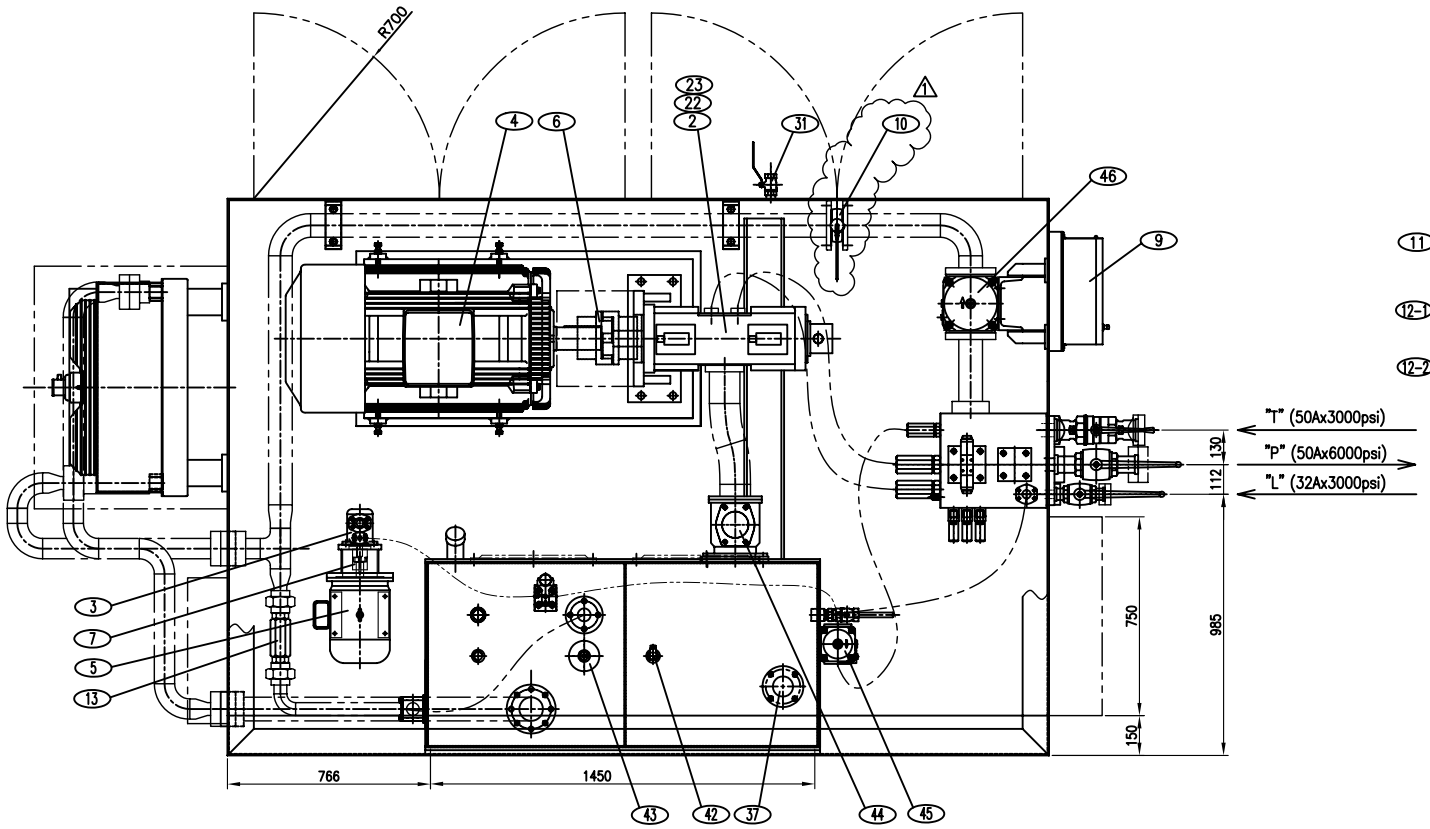

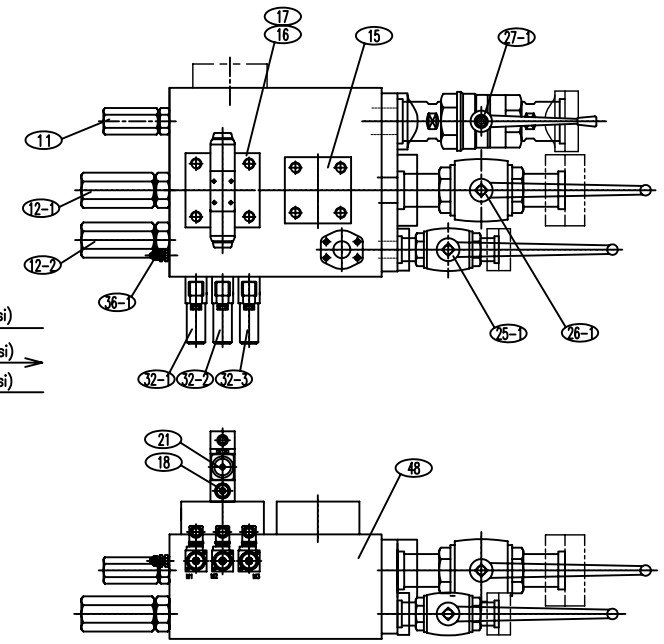

DETAIL MANIFOLD (2/1)

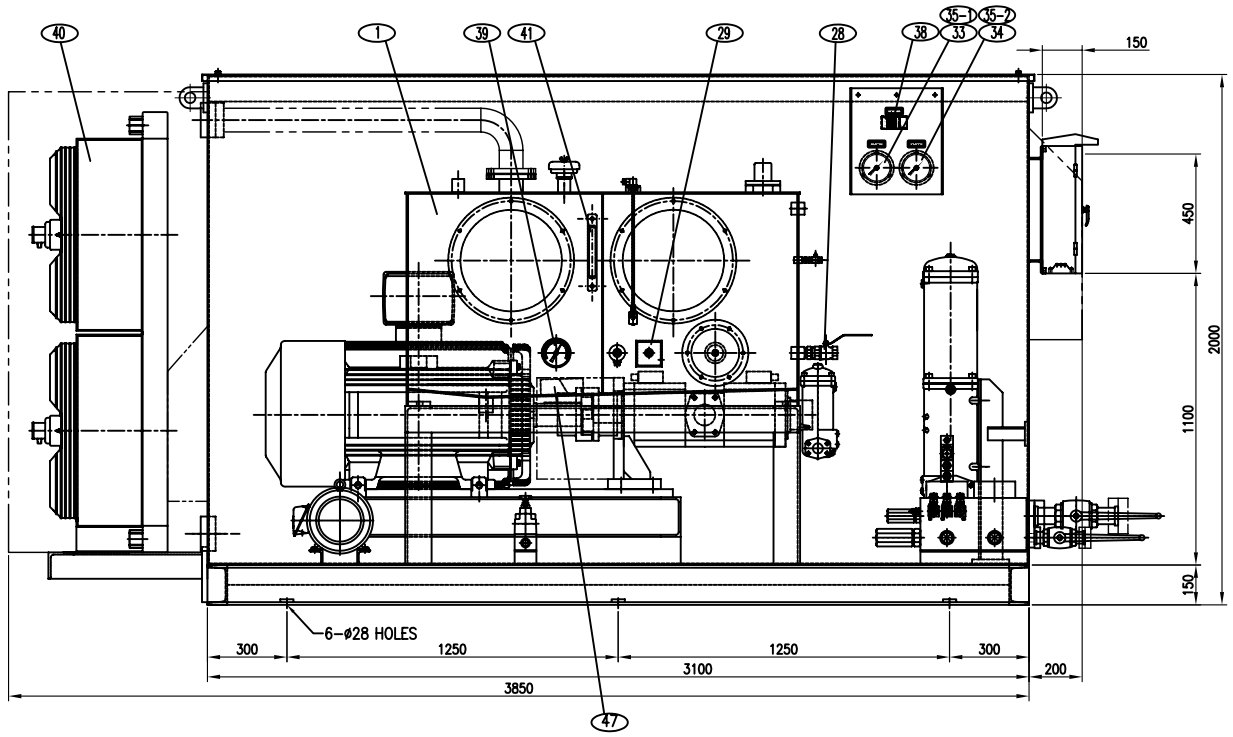

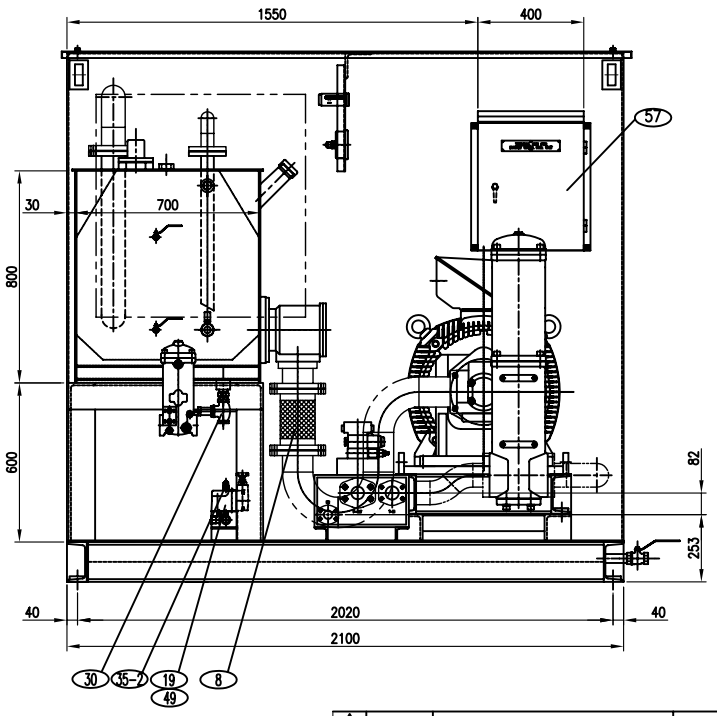

NOTE

1. MAX. PRESSURE : 180 kg/cm²
2. FLOW : 600 L/min
3. ELECTRICITY
   - MAIN : 440VAC, 60Hz, 3Ph
   - SPACE HEATER : 220VAC, 60Hz, 1Ph
   - SOL POWER : 110VAC, 60Hz, 1Ph
   - FAN COOLER : 440AC, 60Hz, 3Ph
   - HEATER : 440AC, 60Hz, 3Ph
4. OIL QUANTITY : 600Lit
5. HYD. OIL : MINERAL OIL ISO VG32
6. PAINT
   1) TANK INSIDE : ACID TREATMENT
   2) UNIT : SURFACE PREPARATION – SSPC–SP10 SA2.5

1st – EPOXY PRIMER	: 50 M
2nd – EPOXY H.B	: 100 M
3rd – ACRYLIC URETHANE(COLOR : 5G 5/10)	: 40 M
TOTAL D.F.T	: 190 M

7. BUTTERFLY NUTS & DOOR HINGES SHALL BE SUS304 MATERIAL
8. WEIGHT : ab. 6,500 kg

NO.	DESCRIPTION	MAT'(KS)	UNIT QUANTITY	TOTAL QUANTITY	PER UNIT WEIGHT(kg)	TOTAL WEIGHT(kg)	REMARK'S
1	OIL TANK 600LIT		1	1			HYSYS

NO.	DATE	REVISIONS & DESCRIPTION	ENG'R	APPR'D
3				
2				
1				

TITLE	PLANT		TITLE HY'D UNIT ASS'Y FOR BUCKET WHEEL						
	FACILITY								
	DRAWN	CHECKED	REVIEWED	APPROVED	DRAWN	CHECKED	REVIEWED	APPROVED	
SIGNATURE									
DATE									

SCALE	NONE	PROJECTION	
SIZE	A1	DIMENSION	mm
REF. DWG. NO.	EQUIPMENT		
	MAKER DWG. NO.	HS-RBH-0501	1

HYSYS
HYSYS
GIMHAE KOREA